DC GEAR MOTOR

MODEL:YGY6138-R528C

圆睿鑫
YUANRUIXIN

Typical Applications:

※Stage illmination
※Automatic door-lock
※Strongbox

Length of Gear	Gear ratio	
14.3	90	104

Shape dimension figure

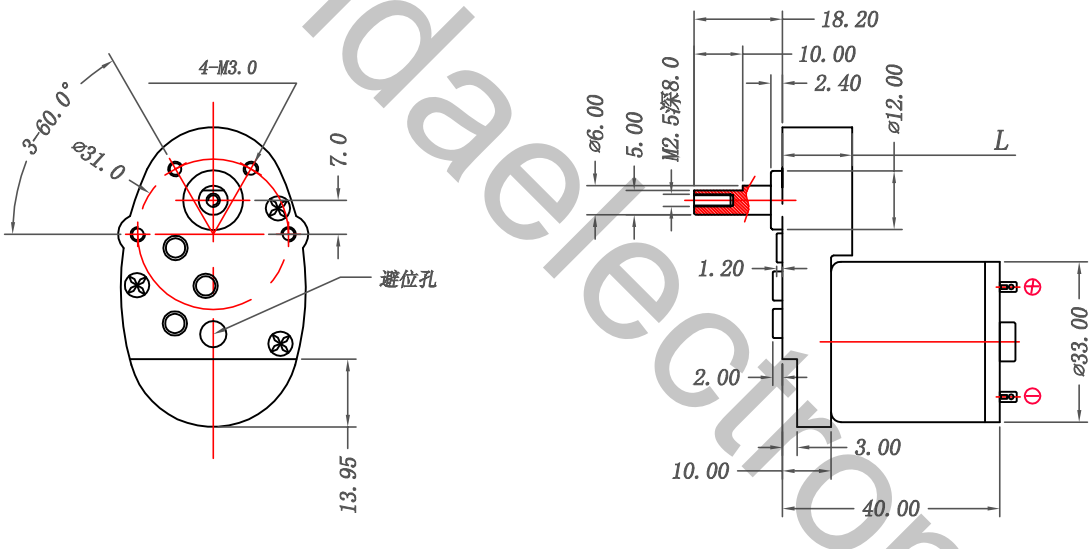

Unit: MM

The motor reference

MODEL	VOLTAGE	NO LOAD		AT MAXIMUM EFFICIENCY					STALL		
		SPEED	CURRENT	SPEED	CURRENT	TORQUE		OUTPUT	TORQUE		CURRENT
	V	r/min	A	r/min	A	mN.m	kg.cm	W	mN.m	kg.cm	A
YGY6138-R528C-104	DC12.0V	65	0.18	55.5	0.17	512.8	5.17	0.6	706	7.20	3.1

www.landaelectronic.com